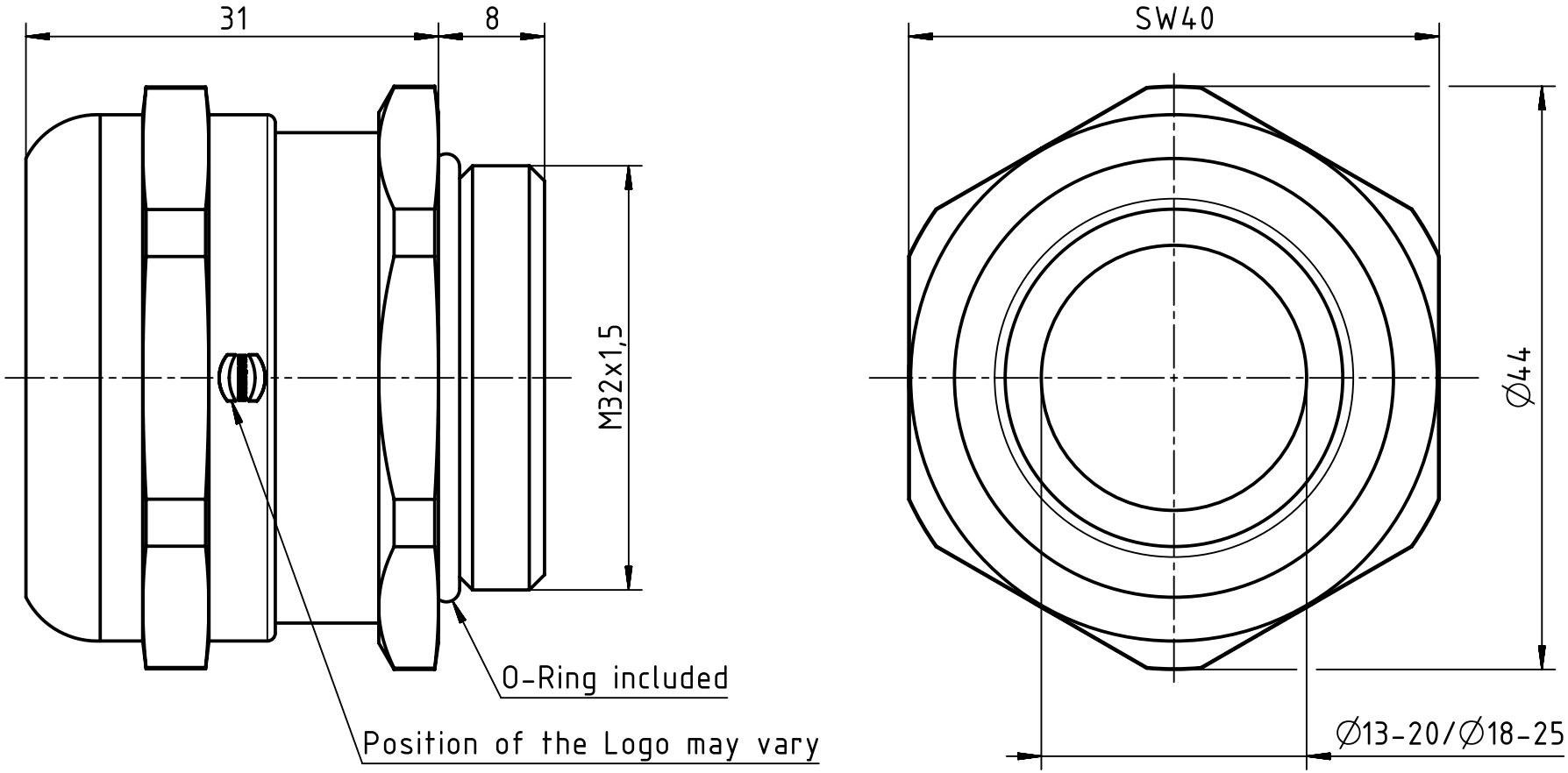


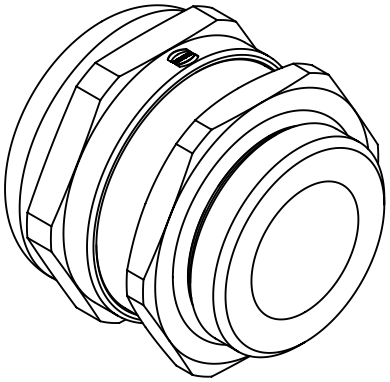

| | | | | | |
|---|---|---|---|---|---|
| All Dimensions in mm<br>Original Size DIN A4 | Scale<br>2:1 | Free size tol. | | Ref.<br>Sub. | |
| All rights reserved<br>Department EL PD - DE | Created by<br>LONGL | Inspected by<br>DINGB | Standardisation<br>TIEMANNA | Date<br>2016-03-24 | State<br>Final Release |
| HARTING Electric GmbH & Co. KG<br>D-32339 Espelkamp | Title<br>Han CGM-M M32x1,5 D.13-20mm/18-25mm | | | | Doc-Key / ECM-Nr.<br>100177141/UGD/004/C<br>500000102288 |
| | Type<br>TB | Number<br>19 00 000 5095 | | Rev.<br>C | Page<br>1/1 |

A4