panel cut out
(1:1)

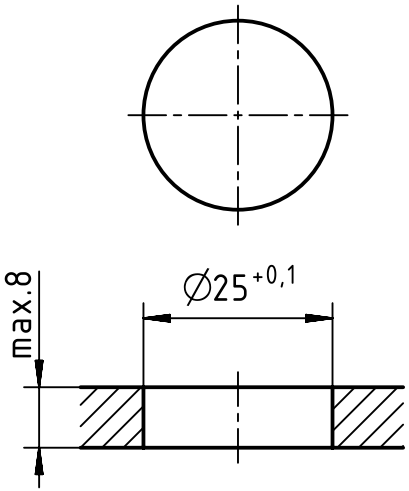

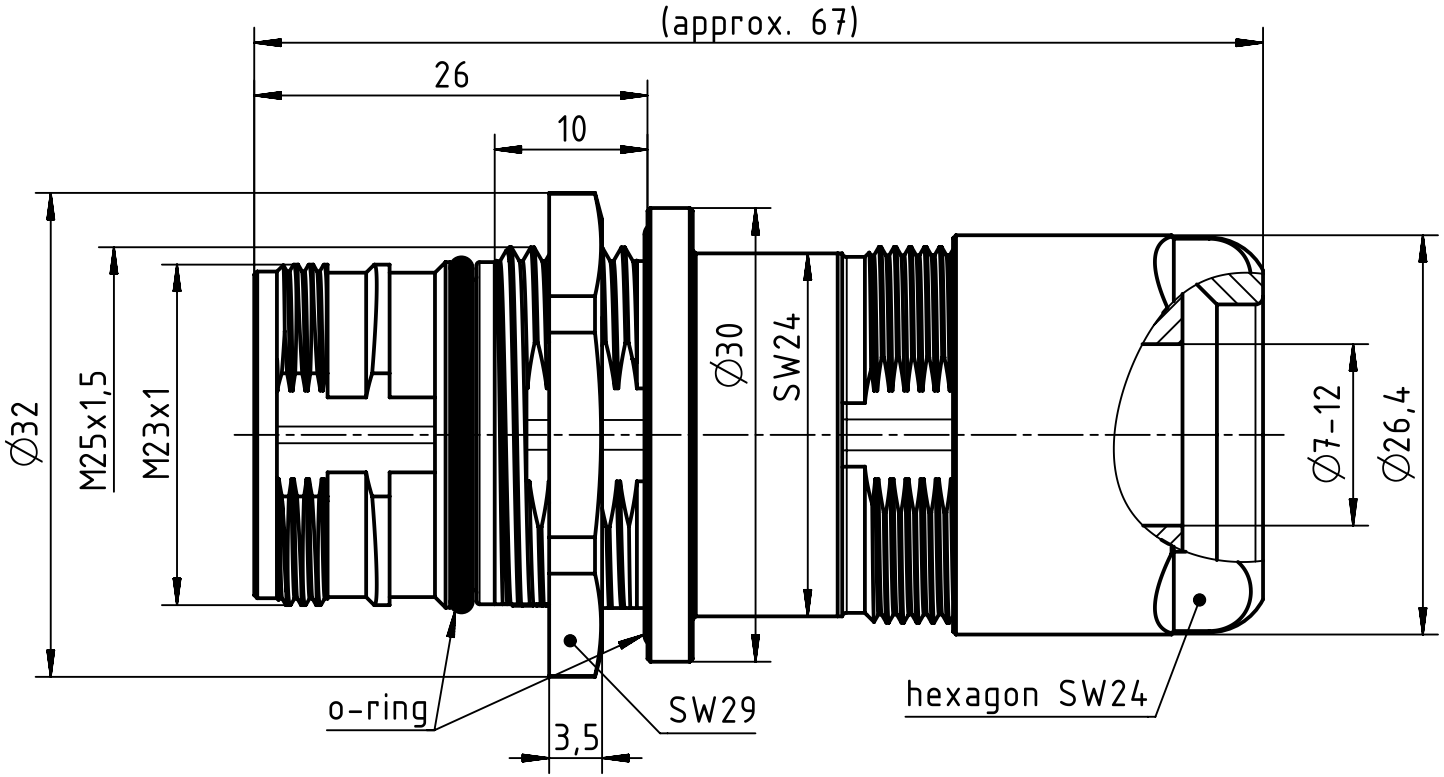

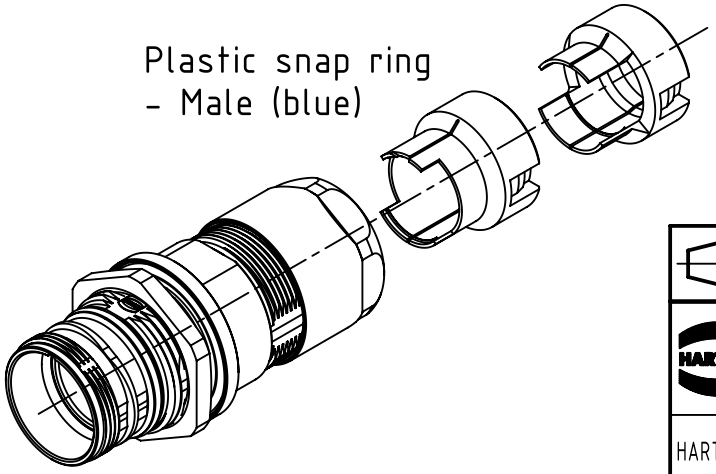

All Dimensions in mm Original Size DIN A4	Scale 2:1	Free size tol.		Ref. Sub.	
All rights reserved Department EL PD	Created by DYCKC	Inspected by GRUBES	Standardisation TIEMANNA	Date 2019-07-19	State Final Release
	Title M23 Cable to cable housing 7-12 mm				Doc-Key / ECM-Nr. 100708294/UGD/000/C 500000154908
HARTING Electric GmbH & Co. KG D-32339 Espelkamp	Type TB	Number 09 15 100 0310		Rev. C	Page 1/1

A4